FV320/420 series Foot Valve

Technical Specification

Model	FV320	FV420
Working Fluid	air (filtered by 40UM sieve)	
ports and positions	3/2 way	4/2 way
Action type	directly operated type	
Port size	06:G1/8	08:G1/4
Operating pressure	0~0.8Mpa	
working temperature	-5~60℃(28~140° F)	
Lubrication oil	not need	

Symbol

FV320

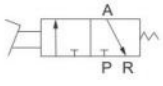

FV420

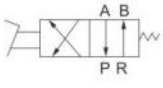

Order Code

FV — Specification code
FV: Foot valve

420 — ways
320: 3/2 way
420: 4/2 way

Dimension(mm)

FV320

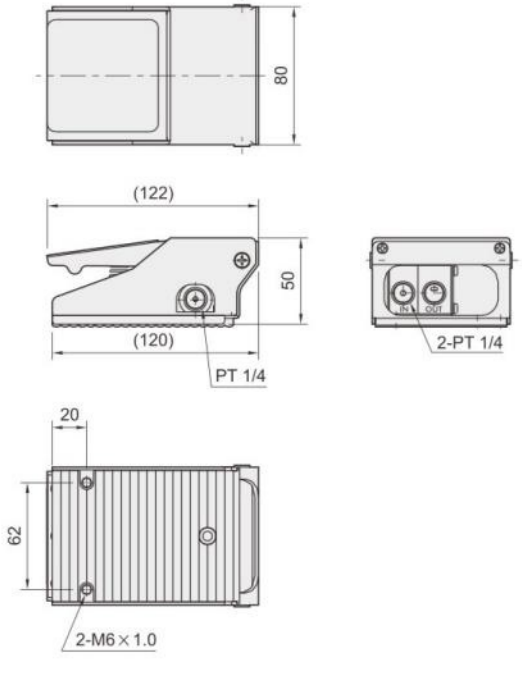
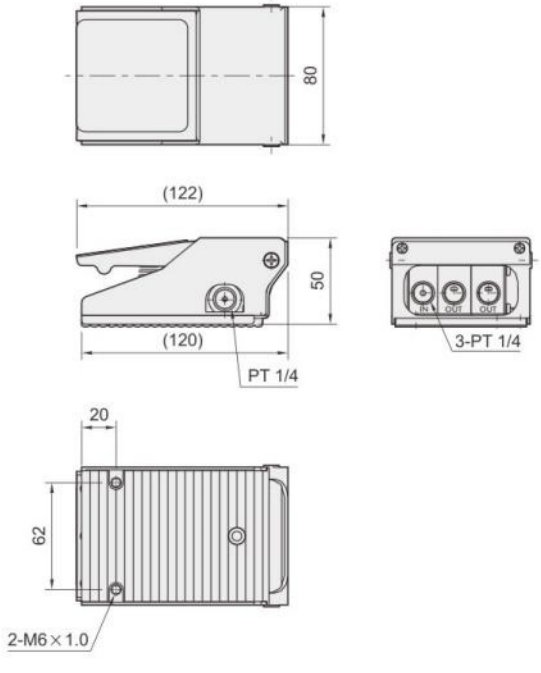
FV320